Remote Probe Strap-on High Limit Thermostat

THRP Series - Installation Instructions

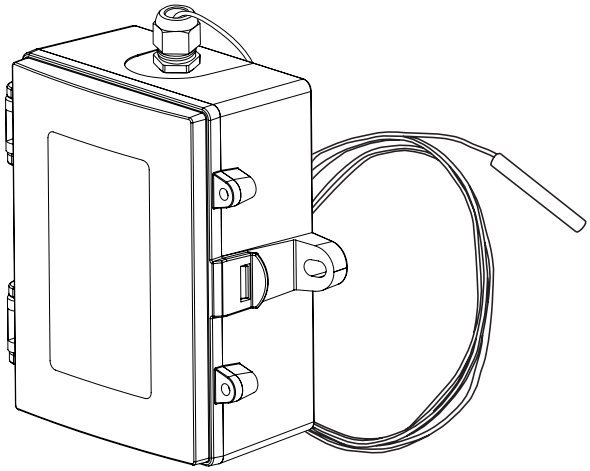

INTRODUCTION

The single point strap-on temperature thermostat incorporates a precision platinum RTD encapsulated in a 6 mm (0.236") OD, 304 stainless steel probe and is available in various lengths. All probes provide excellent heat transfer, fast response and resist moisture penetration. A transmitter that provides a high accuracy signal with excellent long term stability, low hysteresis and fast response is available with various ranges. A compact Polycarbonate enclosure with a hinged and gasketed cover is provided for ease of installation.

BEFORE INSTALLATION

Read these instructions carefully before installing and commissioning the temperature sensor. Failure to follow these instructions may result in product damage. Do not use in an explosive or hazardous environment, with combustible or flammable gases, as a safety or emergency stop device or in any other application where failure of the product could result in personal injury. **Do not exceed the device ratings**.

MOUNTING

The strap-on sensor installs directly onto any pipe where an immersion sensor with thermowell can't be installed.

Once a suitable spot is selected, remove a small section of insulation if present and set aside. It is recommended that thermal compound be used to improve heat transfer. Spread a liberal amount on the pipe. Lay probe in thermal compound and secure sensor to pipe using a worm gear clamp (not included). For added protection it is recommended to wrap probe cable around pipe 1 to 2 times as shown in Figure 1. Re-install insulation if present, allowing sensor cable to protrude.

Mount the enclosure on a flat surface in close proximity to the area where the probe inserted on the pipe. Secure the enclosure with (2) #10 x 25 mm (1") self tapping screws (not provided). As shown in Figure 2.

The enclosure has a hinged cover with latch. Open cover by pulling slightly on the latch on the right side of the enclosure. At the same time pulling on the cover, as shown in Figure 3.

A 1/2" NPT threaded connection hole is provided in the bottom of the enclosure. Screw the EMT connector or cable gland connector in until tight. See Figure 4. It is recommended that weatherproof conduit or cable gland fittings be used. The F style enclosure includes a 1/2" NPT to M16 thread adapter and cable gland fitting.

Make wiring connections as per the "Wiring" illustrations on Page 2.

Swing door closed until securely latched. For added security, 2 screws are provided that may be installed in the integrated screw tabs. See Figure 5.

Figure 1

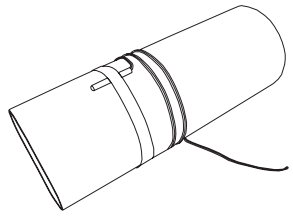

Figure 2

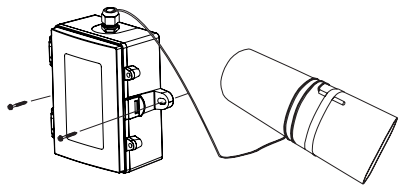

Figure 3

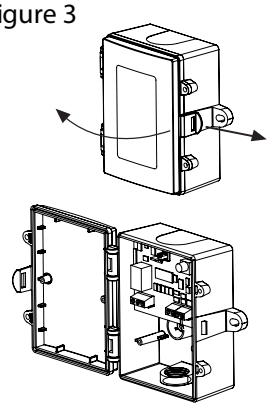

Figure 4

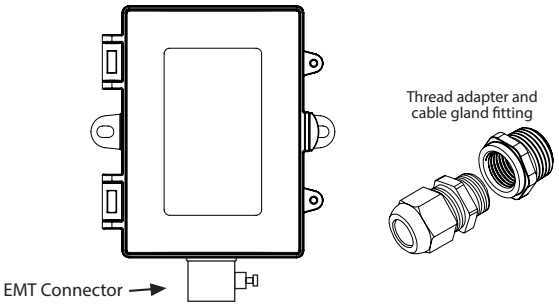

Figure 5

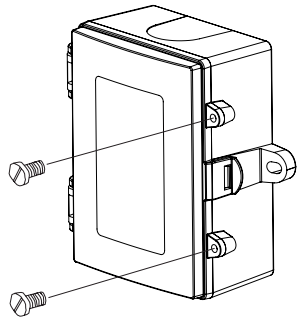

 Copyright © Greystone Energy Systems, Inc. All Rights Reserved Phone: +1 506 853 3057 Web: www.greystoneenergy.com

WIRING

- Deactivate the 24 Vac/dc power supply until all connections are made to the device to prevent electrical shock or equipment damage.
- Use 14-22 AWG shielded wiring for all connections and do not locate the device wires in the same conduit with wiring used to supply inductive loads such as motors. Make all connections in accordance with national and local codes.
- The temperature thermostat comes with the temperature sensor pre-wired to the PCB. If removal is required for installation then it may be re-wired as shown in Figure 6.
- Pull at least six inches of control wire into the enclosure, then complete the wiring connection according to the wire diagram for the applicable power supply as shown in Figure 7.
- Connect the DC positive or the AC voltage hot side to the PWR terminal. The supply common is connected to the COM terminal. See Figure 7.
- The relay has both Normally Open (NO) and Normally Closed (NC) contacts available. The relay output is available on the NO/COM/NC terminal. Make connections before applying power as shown in Figure 8.
- The setpoint differential has 3 jumper selectable settings (Low/Mid/High). Set jumper to desired differential as shown in Figure 10.
- To set the switching setpoint, turn the setpoint potentiometer to the desired temperature setting as shown in Figure 9.
- Once all connection settings are made and checked, power can be applied.

Figure 6

Temperature sensor wiring to PCB (Factory Wiring)

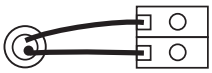

No Polarity

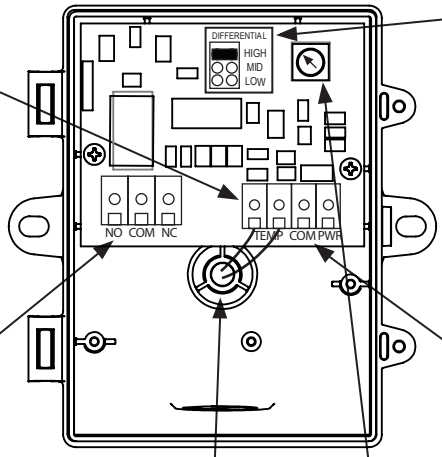

Temperature Sensor

Figure 10

Setpoint Differential Setting

HIGH = 5.6°C/10°F

MID = 2.8°C/5°F

LOW = 1.1°C/2°F

Figure 8

Relay Output Wiring

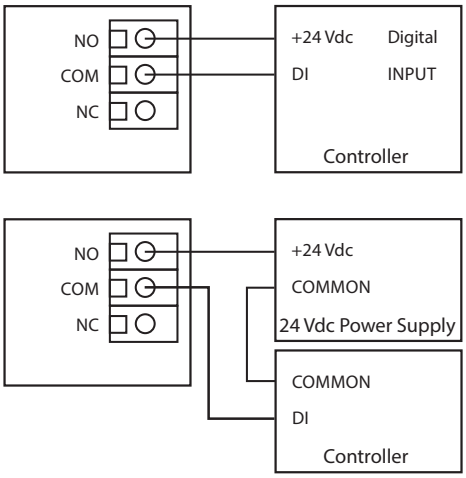

Figure 7

Power Supply Wiring

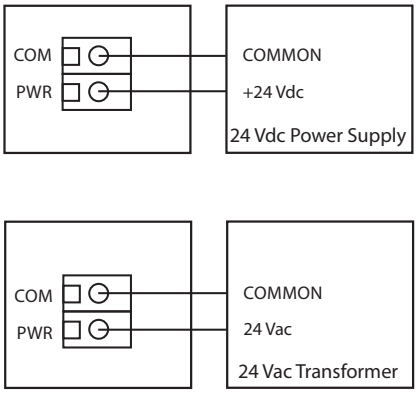

Figure 9

Setpoint Adjustment

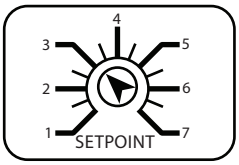

	Range 1		Range 2
1	38°C (100°F)	1	38°C (100°F)
2	49°C (120.2°F)	2	41.6°C (106.9°F)
3	60°C (140°F)	3	45.3C (113.5°F)
4	71°C (159.8°F)	4	49°C (120.2°F)
5	82°C (179.6°F)	5	52.6°C (126.7°F)
6	93°C (199.4°F)	6	56.3°C (134.3°F)
7	104°C (220°F)	7	60°C (140°F)

SPECIFICATIONS:

Power Supply:.....12 to 28 Vac/dc
Consumption:.....50 mA max
Relay Contacts:.....SPDT, Form C contacts (N.O. and N.C.)
5 Amps @ 30 Vac/250 Vac resistive
1.5 Amps @ 30 Vdc/250 Vac inductive
Relay Action:.....Activates on temperature rise
Setpoint Operation:.....Single-turn knob-pot on PCB
Adjustable Setpoint:.....**Range 1:** 38 to 104°C (100 to 220°F)
Range 2: 38 to 60°C (100 to 140°F)
Setpoint Temperature:.....Low/Mid/High jumper selectable
Differential 1.1, 2.8, 5.6°C (2, 5, 10°F)
Temperature Sensor:.....10K ohm curve matched precision thermistor
Sensor Accuracy:.....±0.2°C, 0 to 70°C (±0.36°F, 32 to 158°F)
Probe Sensing Range:.....-20 to 105°C (-4 to 221°F)
Probe Material:.....304 Series Stainless Steel
Probe Diameter:.....6 mm (0.236")
Probe Length:.....50 mm, 100 mm, 150 mm, 200 mm (2", 4", 6", 8")
Wire Material:.....PVC insulated, parallel bonded
Operating Conditions:.....-10 to 50°C (14 to 122°F), 5 to 95% RH, non-condensing
Storage Conditions:.....-30 to 70°C (-22 to 158°F), 5 to 95% RH, non-condensing
Wiring Connections:.....Screw terminal block (14 to 22 AWG)
Enclosure:.....Grey Polycarbonate UL94-V0, IP65 (NEMA 4X)
F style includes thread adapter (1/2" NPT to M16)
and cable gland fitting
Weight:.....TBD
Country of Origin:.....Canada

DIMENSIONS

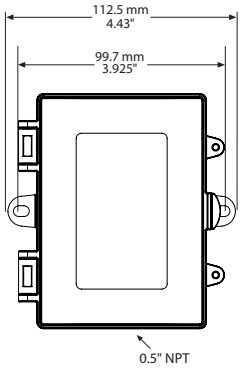

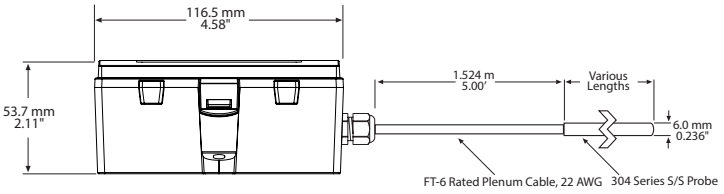

PRINTED IN CANADA

 Copyright © Greystone Energy Systems, Inc. All Rights Reserved