GREYSTONE
ENERGY SYSTEMS INC

Duct Dewpoint Transmitter

DWDT Series - Installation Instructions

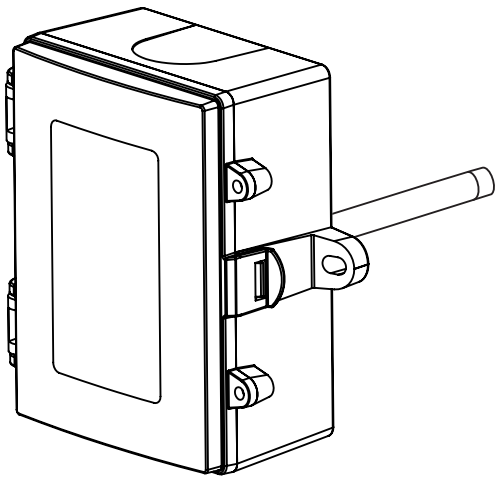

INTRODUCTION

The duct dewpoint transmitter is designed for use in environmental monitoring and control systems where high performance and stability are demanded. It's state-of-the-art design combines digital linearization and temperature compensation with a highly accurate and reliable thermoset polymer based capacitance humidity sensor and curve-matched NTC thermistor temperature sensor for reliability and accuracy in the most critical applications. The sensors are encapsulated in a 60 micron HDPE filter at the end of a 230 mm (9") S/S probe and a compact enclosure.

BEFORE INSTALLATION

Read these instructions carefully before installing and commissioning the transmitter. Failure to follow these instructions may result in product damage. Do not use in an explosive or hazardous environment, with combustible or flammable gases, as a safety or emergency stop device or in any other application where failure of the product could result in personal injury. **Take electrostatic discharge precautions during installation and do not exceed the device ratings.**

MOUNTING

The transmitter installs directly into any air duct with a minimum width/diameter of 25.5 cm (10"). Select a suitable installation area in the middle of the duct wall. To achieve the best reading, do not place in an area where air stratification may be present. Mount the sensor at least 1.5 m (5 ') in either direction from elbows, dampers, filters or other duct restrictions. Avoid areas where the transmitter is exposed to vibrations or rapid temperature changes.

Once a suitable spot is selected, drill a 15 -20 mm (0.6" - .75") hole for the probe.

Slide the probe in the drilled hole until the enclosure is flush against the duct. The airflow direction is not important. Secure the enclosure to the duct with (2) #10 x 1" (25 mm) self tapping screws (not provided). Tighten screws until the enclosure is tight against the duct and that there is no movement of the enclosure as shown in Figure 1.

A foam gasket is provided on the back of the enclosure that provides a tight seal against any air leaks.

The enclosure has a hinged cover with a latch. Open the cover by pulling slightly on the latch on the right side of the enclosure and at the same time pulling on the cover, as illustrated in Figure 2.

A 1/2" NPT threaded connection hole is provided in the bottom of the enclosure as shown in Figure 3. Screw the EMT connector or cable gland connector in until tight. It is recommended that weatherproof conduit or cable gland fittings be used. The F style enclosure includes 1/2" NPT to M16 thread adapter and cable gland fitting.

Two security screws are provided which can be installed to help secure the cover once settings and wiring connections are complete. See Figure 4.

Figure 1

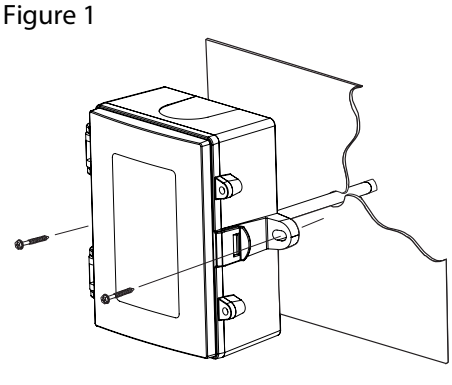

Figure 2

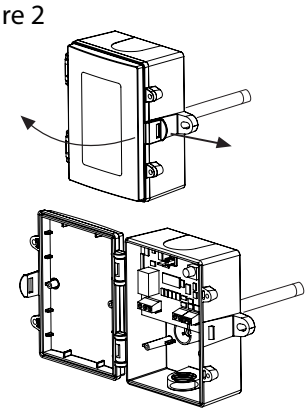

Figure 3

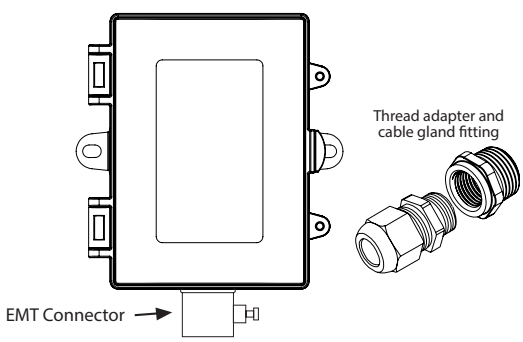

Figure 4

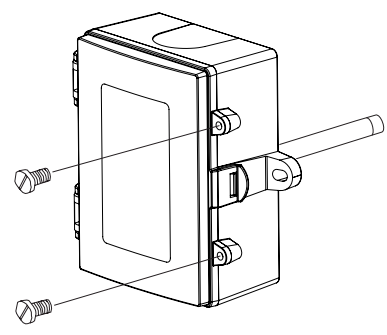

 Copyright © Greystone Energy Systems, Inc. All Rights Reserved Phone: +1 506 853 3057 Web: www.greystoneenergy.com

WIRING

- Deactivate the 24 Vac/dc power supply until all connections are made to the device to prevent electrical shock or equipment damage.
- Follow proper electrostatic discharge (ESD) handling procedures when installing the device or equipment damage may occur.
- Use 22 AWG shielded wiring for all connections and do not locate the device wires in the same conduit with wiring used to supply inductive loads such as motors.
- Make all connections in accordance with national and local codes.

Connect the 24 Vac/dc power supply to the terminals labeled PWR (power) and COM (common) as shown in Figure 6. This device has a half-wave type power supply so use caution when wiring multiple devices so that the circuit ground point is the same on all devices and the controller. The device is reverse voltage protected and will not operate if connected backwards.

Figure 5

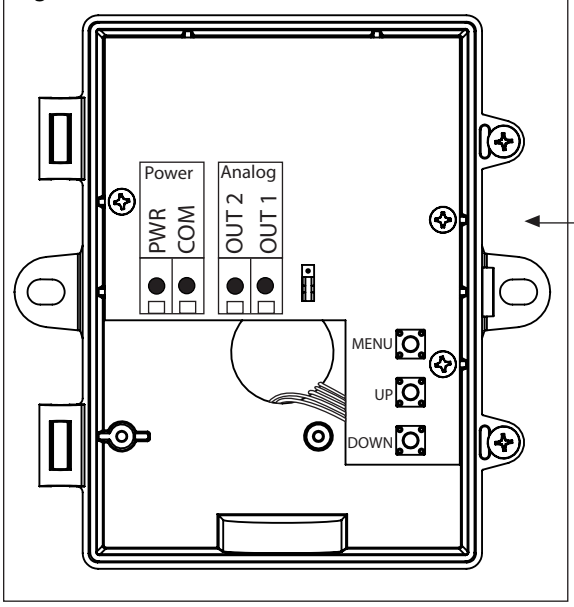

Figure 6

Wiring for all output signals with power from controller

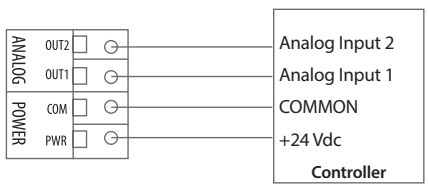

Wiring for all output signals with external power supply or transformer

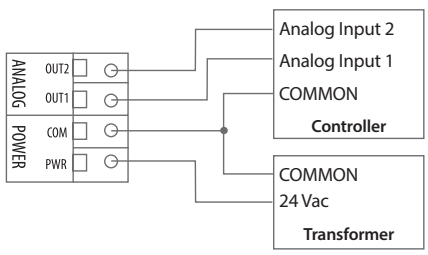

DIMENSIONS

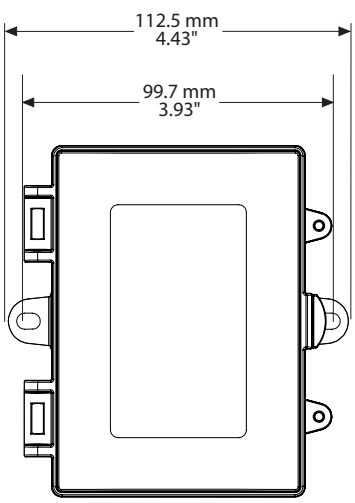

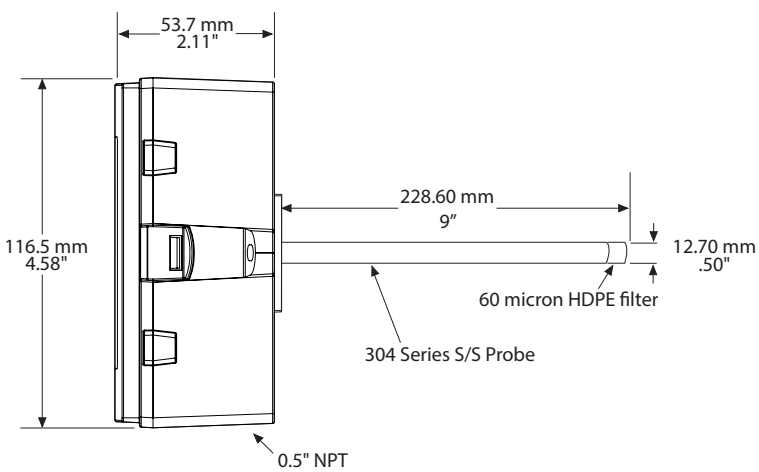

 Copyright © Greystone Energy Systems, Inc. All Rights Reserved

OPERATION

Start-Up Mode

When the device is powered on, it will go through a brief start-up mode. The LCD will display a sequence of information depending on the model. At the end of the start-up sequence, normal operation will begin.

STEP 1 LCD Test
All segments lit for 2 seconds

STEP 2 Model
Displays the model type for 2 sec.
(Volt or current depending on model ordered)

STEP 3 Software Version A1.0 for 2 sec

Normal Mode

In normal operation the device:

- reads the temperature and RH sensors
- calculates values for dewpoint, wet bulb and enthalpy
- updates the LCD values
- updates the analog outputs
- monitors the menu key for activity

If the <MENU> key is pressed, normal operation is suspended while the menu functions are serviced. The program will automatically exit the menu after a period of inactivity.

MENU

The device has several parameters that can be configured locally via the User menu using the keypad and LCD. All parameters default to typical values but the installer may want to change some values. Any changes made are saved in non-volatile memory and are restored in case of a power loss. Only the menu items relevant to the device model will be shown. The menu can be accessed at any time after the start-up mode and if there is 5 minutes of inactivity the menu will close and normal operation will continue.

To enter the menu, press and release the <MENU> key. This will enter the User menu step 1, pressing the <MENU> key a second time advances to step 2. Each press of the <MENU> key saves the current setting and advances the menu item. The <UP> and <DOWN> keys are used to make changes to program variables by scrolling through the available options. When a value is changed, use the <MENU> key to save it to memory and advance to the next menu item.

<MENU> Press and release to enter the User menu.

5V / 10V (default = 5V)
(This item is only shown for the voltage output model.)
Use <UP> or <DOWN> to toggle the selection.

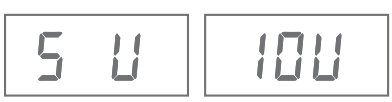

5V *10V*

<MENU>

Output Signal 1
Temperature Range (default = -30-50 °C)
This item sets the dry bulb temperature range for OUT1.
Use <UP> or <DOWN> to toggle -30-50 °C, 0-50 °C,
-22-122 °F or 32-122 °F.

-30-50 °C *0-50 °C* *-22-122 °F* *32-122 °F*

<MENU>

 Copyright © Greystone Energy Systems, Inc. All Rights Reserved Phone: +1 506 853 3057 Web: www.greystoneenergy.com

Output Signal 2 (default = Td)
This item selects the OUT2 parameter.
Use <UP> or <DOWN> to toggle Td, Tw or Enthalpy.
The display is either "Td", "Tw" or "kJ/kg + BTU/lb".

<MENU>

Only 1 of the next 3 items is shown, depending on what parameter is selected for Output Signal 2
The shown scale (C/F) depends on the previous Temperature Range selection

Dewpoint Temperature Range (default = -30-50 °C or -22-122 °F)
This item sets the dewpoint temperature range for OUT2.

Use <UP> or <DOWN> to toggle either -30-50, -20-40 or 0-50 for °C,
or -22-122, -4-104 or 32-122 for °F.
Td is lit + either °C or °F.

-30-50 °C *-20-40 °C* *0-50 °C* *-22-122 °F* *-4-104 °F* *32-122 °F*

Wet Bulb Temperature Range (default = -20-50 °C or -4-122 °F)
This item sets the wet bulb temperature range for OUT2.

Use <UP> or <DOWN> to toggle either -20-50 or 0-50 for °C, or -4-122 or 32-122 for °F.
The display is similar to Td, except Tw is lit + either °C or °F + -2-5, 0-5, -4-1 or 3-1.

-20-50 °C *0-50 °C* *-4-104 °F* *32-122 °F*

<MENU>

Enthalpy Range (default = 0-340 kJ/kg)
This item sets the enthalpy range for OUT2 and also the units.
Use <UP> or <DOWN> to toggle either 0-250 kJ/kg, 0-340 kJ/kg, 0-107 BTU/lb or 0-146 BTU/lb. Unit is lit + max value.

<MENU>

LCD (default = Out1)
This item selects what parameter are displayed on the LCD.
Use <UP> or <DOWN> to toggle Out1, Out2 or both (toggle).
The display is either L1, L 2 or L12.

<MENU>

Temperature Offset (default = 0 °C or 0 °F)
This item is for field calibration and is used to add an offset to the temperature measurement.
Use <UP> or <DOWN> to change from -10-10 °F or -5-5 °C. Either °C or °F is lit.

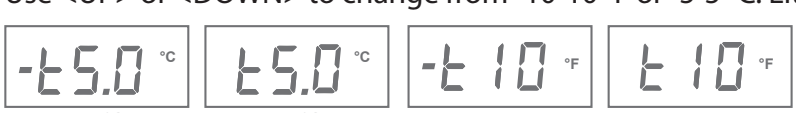

-5.0 °C *5.0 °C* *-10 °F* *10°F*

<MENU>

RH Offset (default = 0 %RH)
This item is for field calibration and is used to add an offset to the RH measurement.
Use <UP> or <DOWN> to change from -10-10 %RH.

<MENU>

 Copyright © Greystone Energy Systems, Inc. All Rights Reserved

Altitude (default = 0 ft)
This item is to set the local altitude to increase calculation accuracy.
Use <UP> or <DOWN> to change from A 0 to A60. Resolution is 100 ft steps.

A60

<MENU> Exits the menu and returns to normal operation.

SPECIFICATIONS:

Sensor Type:
RH Sensor.....Thermoset polymer based capacitive
Temperature Sensor.....NTC Thermistor
Measurement Range:
Relative Humidity.....0 - 100 %RH
Dry Bulb Temperature.....-30 – 50 °C (-22 – 122 °F)
Calculated Values:
Dewpoint Temperature.....-30 – 50 °C (-22 – 122 °F)
Wet Bulb Temperature.....-30 – 50 °C (-22 – 122 °F)
Enthalpy.....0 – 340 kJ/kg (0 – 146 BTU/lb)
Accuracy:
Relative Humidity (RH).....± 2% RH, 10 – 90 %RH @ 25 °C
Dry Bulb Temp.(T)..... ± 0.2 °C (± 0.4 °F) / 0 – 50 °C (32 – 122 °F)
Dewpoint Temp. (Td).....± 1.0 °C (± 1.8 °F) @ 40 %RH / 25 °C
Wet Bulb Temp.(Tw).....± 1.0 °C (± 1.8 °F) @ 50 %RH / 25 °C
Enthalpy (En).....± 2 kJ/kg (± 1 BTU/lb) @ 50 %RH / 25 °C
Output:
Output Signals (2X).....4 – 20 mA or 0-5/0-10 Vdc (factory set)
Signal 1.....Dry Bulb Temperature (field selectable range)
T Range 1 = -30 – 50 °C (-22 – 122 °F)
T Range 2 = 0 – 50 °C (32 – 122 °F)
Signal 2.....Dewpoint Temperature, Wet Bulb Temperature or Enthalpy (field selectable)
Td Range 1 = -30 – 50 °C (-22 – 122 °F)
Td Range 2 = -20 – 40 °C (-4 – 104 °F)
Td Range 3 = 0 – 50 °C (32 – 122 °F)
Tw Range 1 = -20 – 50 °C (-4 – 122 °F)
Tw Range 2 = 0 – 50 °C (32 – 122 °F)
En Range 1 = 0 – 340 kJ/kg (0 – 146 BTU/lb)
En Range 2 = 0 – 250 kJ/kg (0 – 107 BTU/lb)
Output Impedance .....500 Ω max for current (@ 24 Vdc), 10 KΩ min for voltage
Power:
Power Supply.....20 – 27 Vdc, 16 – 27 Vac (non-isolated half-wave rectified)
Consumption:
Current model .....50 mA max @ 24 Vdc, 1.5 VA max @ 24 Vac
Voltage model.....30 mA max @ 24 Vdc, 1 VA max @ 24 Vac
Operating Conditions:
Operating Conditions.....-30 – 50 °C (-22 – 122 °F), 0 – 95 %RH non-condensing
Storage Conditions.....-40 – 70 °C (-40 – 158 °F), 0 – 95 %RH non-condensing
Mechanical:
Wiring Connections.....14 – 22 AWG terminal block
Enclosure
Dimensions.....145W x 100H x 64D mm (5.7W x 3.95H x 2.5D in)
Material.....Grey polycarbonate, UL94-V0
F style includes thread adapter (1/2" NPT to M16) and cable gland fitting
Ratings.....IP65 (NEMA 4X)
Probe.....230 mm (9") L x 12.7 mm (1/2") D, 304 S/S with porous filter
Weight.....320 gm (11.3 oz)
Standards:
Approvals.....CE, RoHS
LCD Display Values:
Temperature .....-30.0 – 50.0 °C (0.5 °C resolution) r -22 – 122 °F (1 °F resolution)
Dewpoint.....-30.0 – 50.0 °C Td (0.5 °C resolution) or -22 – 122 °F Td (1 °F resolution)
Wet Bulb.....-20.0 – 50.0 °C Tw (0.5 °C resolution) or -4 – 122 °F Tw (1 °F resolution)
Enthalpy .....0 – 340 kJ/kg (1 kJ/kg resolution) or 0 – 146 BTU/lb (1 BTU/lb resolution)

Country of Origin.....Canada

PRINTED IN CANADA

 Copyright © Greystone Energy Systems, Inc. All Rights Reserved