GREYSTONE
ENERGY SYSTEMS INC

CARBON MONOXIDE DETECTOR

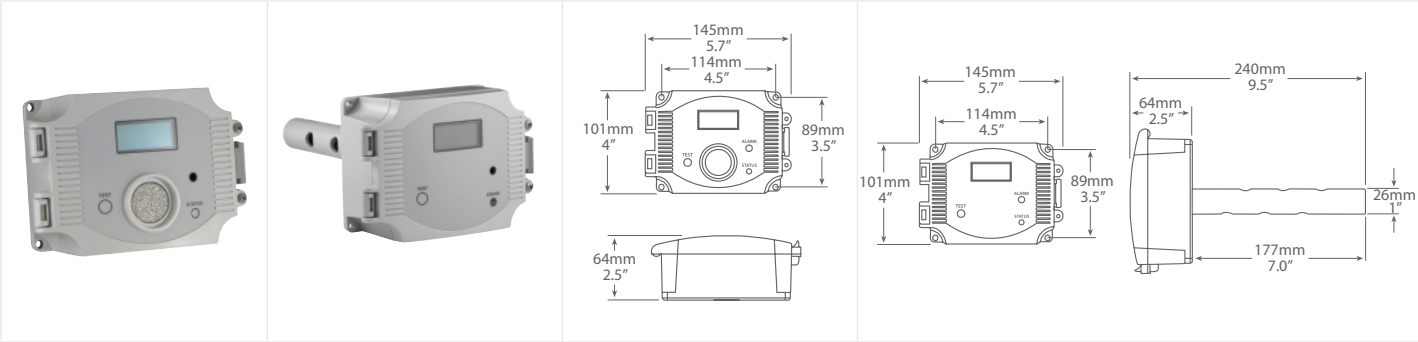

CMD5B SERIES CMD5B4 CMD5B5

PRODUCT DESCRIPTION

The CMD series carbon monoxide detector uses an electrochemical sensor to monitor the carbon monoxide level and outputs a field-selectable 4-20 mA or voltage signal. The voltage signal may also be set to 0-5 or 0-10 Vdc. The sensing range and output may be scaled to either 100, 150, 300, 400 or 500 ppm via the on-board menu. A front panel LCD is standard to ensure easy setup and operation. It is available in either space or duct mount configurations.

Other standard features include a back light for the LCD, a front panel test switch, status indication and an alarm buzzer. The test function may also be controlled remotely with a digital input signal. The on-board menu allows for local configuration of all device parameters.

Optional features include one or two alarm relays and/or RS-485 network communications configured for either ModBus or BACnet® protocol.

TYPICAL INSTALLATION

For complete installation and wiring details, please refer to the product installation instructions.

The CMD Space can be mounted directly to a wall using the 4 mounting holes provided.

The CMD Duct is installed through the side of the duct, and fastened securely to the duct through the mounting holes provided.

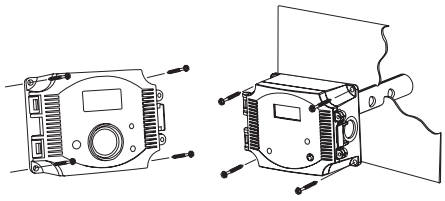

SPECIFICATIONS

MEASUREMENT	Electrochemical
SENSOR AGENCY APPROVALS	Sensor is UL Recognized for ASNI/UL-2034 and UL-2075, E240671
MEASUREMENT RANGE	0-100, 150, 300, 400, or 500 ppm (selectable)
ACCURACY	±5 ppm or ±5% of reading (whichever is greater)
ACCURACY RATED	0 to 50°C (32 to 122°F), 15 to 95 %RH
LIFE EXPECTANCY	5-7 years in air
TYPICAL COVERAGE AREA	700m² (7500ft²) or 15m (50ft) radius
OPERATING CONDITIONS	-20 to 50°C (-4 to 122°F), 15 to 95 %RH, 0.9 to 1.1 atm
SAMPLE METHOD	Diffusion or flow through sample tube for duct mounted models
STABILITY	<5% signal loss/year
RESPONSE TIME	<35 seconds for 90% step change
POWER SUPPLY	24 Vdc ±20% or 24 Vac ±10% (non-isolated half-wave rectified)
CONSUMPTION	100 mA maximum with all options on
PROTECTION CIRCUITRY	Reverse voltage protected and output limited
OUTPUT SIGNAL	4-20 mA (Active), 0-5 or 0-10 Vdc (Selectable)
OUTPUT DRIVE AT CAPABILITY	**Current:** 450Ω maximum **Voltage:** 10 KΩ minimum
OUTPUT RESOLUTION	10 bit PWM (±0.4ppm)
LCD DISPLAY	Displays PPM and menu parameters 1ppm, 35mm W x 15mm H (1.$" x 0.6") Alpha-numeric 2 line x 8 character with backlight
STATUS LED	2 color (re/green) on front panel
TEST SWITCH	Performs I/O tests, front panel and remote connection
BUZZER ALARM	85 db @ 10 cm
BUZZER TRIP POINT	Programmable 20-500 ppm in 10 ppm increments
BUZZER DELAY	Programmable 0-10 minutes in 1 minute increments
OPTIONAL RELAY OUTPUT	One or two Form C (N.O. and N.C.) 5 Amps @ 250 Vac, 5 Amps @ 30 Vdc, p.f. = 1 **Relay 1 Trip Point:** Programmable 20-500 ppm in 10 ppm increments **Relay 2 Trip Point:** Programmable 20-500 ppm in 10 ppm increments **Relay Hysteresis:** Programmable 10-100 ppm in 5 ppm increments **Relay Delay:** Programmable 0-10 minutes in 1 minute increments
OPTIONAL COMMUNICATIONS	BACnet® or Modbus (Refer to installation instructions for full details)
WIRING CONNECTIONS	Screw terminal block (14 to 22 AWG)
ENCLOSURE	ABS, UL94-V0, IP65 (NEMA 4)
ENCLOSURE DIMENSIONS	**Space:** 145mm W x 101mm H x 64mm D (5.7" x 4" 2.5") **Duct:** 145mm W x 101mm H x 240mm D (5.7" x 4" x 9.4")
FIELD CALIBRATION	By applying calibration gas standard (contact Greystone for calibration kit)
COUNTRY OF ORIGIN	Canada

GREYSTONE
ENERGY SYSTEMS INC

WIRING INFORMATION

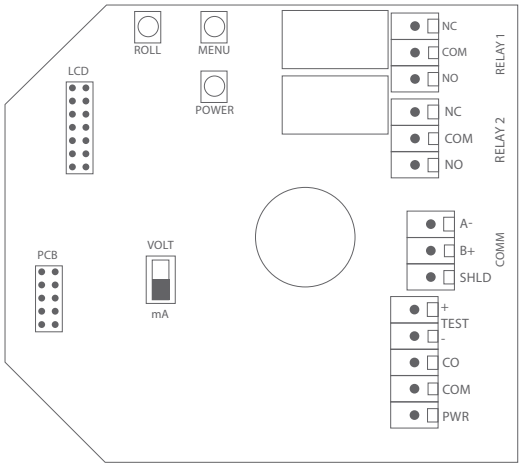

TERMINAL	FUNCTION
+ TEST	Digital Input
- TEST	Common
CO	Analog Output
COM	Common
PWR	Power Supply
A -	Network Output
B +	Network Output
SHLD	Network Output
RELAY 1	
NC	Digital Output
COM	Common
NO	Digital Output
RELAY 2	
NC	Digital Output
COM	Common
NO	Digital Output

ORDERING

PRODUCT	**CMD5B**	Carbon Monoxide Detector
OPTIONS	**4**	Space ABS
	5	Duct ABS
CIRCUIT BOARD RELAY	**000**	No relay
	100	One Relay
	110	Two Relays
OPTIONAL COMMUNICATIONS	**-**	None (leave blank)
	BAC	BACnet® communications
	MOD	Modbus communications

NOTE: Greystone Energy Systems, Inc. reserves the right to make design modifications without prior notice.

PART NUMBER

CMD5B

RoHS COMPLIANT

Greystone Energy Systems, Inc.
150 English Drive, Moncton,
New Brunswick, Canada E1E 4G7

Ph: +1 (506) 853-3057 Fax: +1 (506) 853-6014
North America: 1-800-561-5611
E-mail: mail@greystoneenergy.com